Stealth Premiere P Cushion Order Form

401 York Ave., Duryea, PA 18642 | Phone: 866-800-2002 | Fax: 866-707-3422 | Email: quantumorders@pridemobility.com

Account Number:_____ Date: _____

Provider Name: _____

Contact: _____

Phone: _____ Fax: _____

Email: _____

PO Number: _____

Marked for: _____

Ship to Address: _____

City: _____ State: _____ Zip: _____

Stealth Premiere P Cushion specifications:

- **Positioning.**
- **High density positioning wedges built in for offloading.**
- **Weight capacity: 14-15" W: 175 lbs., 16-21" W: 350 lbs., 22" W: 500 lbs.**
- **Coolcore® technology cover.**

**Stealth Products® Cushions feature patented Coolcore® technology, a chemical free, four-way stretch material that offers moisture wicking, moisture transportation, and moisture evaporation properties.*

Introduction

This form is interactive when viewed in Adobe Acrobat Reader and may not function correctly if opened with applications other than Acrobat. Complete the form by placing checks in the desired boxes and provide information in the interactive fields. Buttons shown at the bottom of the form may be utilized to print or submit the order form through a desktop email application. To email via a web-based application, please 'Save As' and attach the PDF to your email.

HCPCS codes provided should not be considered as legal advice and do not guarantee reimbursement. DME providers are responsible for determining the appropriate billing codes when submitting for insurance reimbursement. Payer coding, coverage, and bundling guidelines may apply. All prices are on-chair MSRP. Prices, specifications, part numbers, and availability are subject to change without notice. Please contact technical service for accurate parts ordering.

Cushion Options

The Stealth Premiere P cushion requires the selection of a Top Foam and a CoolCore Cover. Cushion Liners are optional.

Top Foam selections:

- Visco Top Foam: 1" thick, XXSoft viscoelastic foam topper.
- FRG Top Foam: blue XXSoft FRG foam topper (sizes 22 wide and wider, green MedSoft FRG foam topper).

Liner selections:

- No Liner
- Urethane Liner: 2Way Stretch.
- Polyurethane Liner: 4Way Stretch (upgrade option).

CoolCoreCover:

- CoolCore: Chemical free, 4Way stretch material that offers moisture wicking, moisture transportation, and moisture evaporation properties.

1. Cushion Size Selection

The XXYY portion of all part numbers directly relate to the dimensions of the cushion, where XX represents the width and YY represents the depth. For example, a 16" wide and 18" deep cushion with a Visco Top Foam, Urethane Liner and CoolCore Cover would be PREM-VUC1618. Available sizes are shown on the charts below.

1.a Premiere P Cushion with VISCO Top Foam

Stealth Premiere P Cushion with VISCO Top Foam, No Liner, CoolCore Cover

☐ Premiere P Cushion, 14"-20" Wide, Visco Top Foam, No Liner, CoolCore Cover, E2605.....$358

☐ Premiere P Cushion, 22" Wide, Visco Top Foam, No Liner, CoolCore Cover, E2606 .....$524

Cushion Part: PREM-VNC*XX*YY

Cushion Width: _____

Cushion Depth: _____

Depth \ Width	14"	15"	16"	17"	18"	19"	20"	22"
13"		—	—	—	—	—	—	—
14"			—	—	—	—	—	—
15"			—	—	—	—	—	—
16"						—		—
17"	—							—
18"	—	—						
19"	—	—						—
20"	—	—		—		—		
22"	—	—	—	—	—	—	—	

Cushion selection continued on the following page.

Stealth Premiere P Cushion with VISCO Top Foam, Urethane Liner and CoolCore Cover

☐ Premiere P Cushion, 14"-20" Wide, Visco Top Foam, Urethane Liner, CoolCore Cover, E2605 ..... $358
☐ Premiere P Cushion, 22" Wide, Visco Top Foam, Urethane Liner, CoolCore Cover, E2606 ..... $524

Cushion Part: PREM-VUC*XX*YY
Cushion Width: _____
Cushion Depth: _____

Depth \ Width	14”	15”	16”	17”	18”	19”	20”	22”
13”		—	—	—	—	—	—	—
14”			—	—	—	—	—	—
15”			—	—	—	—	—	—
16”						—		—
17”	—							—
18”	—	—						
19”	—	—						—
20”	—	—		—		—		
22”	—	—	—	—	—	—	—	

Stealth Premiere P Cushion with VISCO Top Foam, Polyurethane Liner and CoolCore Cover

☐ Premiere P Cushion, 14"-20" Wide, Visco Top Foam, Polyurethane Liner, CoolCore Cover, E2605 ..... $416
☐ Premiere P Cushion, 22" Wide, Visco Top Foam, Polyurethane Liner, CoolCore Cover, E2606 ..... $603

Cushion Part: PREM-VPC*XX*YY
Cushion Width: _____
Cushion Depth: _____

Depth \ Width	14”	15”	16”	17”	18”	19”	20”	22”
13”		—	—	—	—	—	—	—
14”			—	—	—	—	—	—
15”			—	—	—	—	—	—
16”						—		—
17”	—							—
18”	—	—						
19”	—	—						—
20”	—	—		—		—		
22”	—	—	—	—	—	—	—	

1.b Premiere P Cushion with FRG Top Foam

Stealth Premiere P Cushion with FRG Top Foam, No Liner, CoolCore Cover

☐ Premiere P Cushion, 14"-20" Wide, FRG Top Foam, No Liner, CoolCore Cover, E2605 ..... $358
☐ Premiere P Cushion, 22" Wide, FRG Top Foam, No Liner, CoolCore Cover, E2606 ..... $524

Cushion Part: PREM-FNC*XX*YY
Cushion Width: _____
Cushion Depth: _____

Depth \ Width	14”	15”	16”	17”	18”	19”	20”	22”
13”		—	—	—	—	—	—	—
14”			—	—	—	—	—	—
15”			—	—	—	—	—	—
16”						—		—
17”	—							—
18”	—	—						
19”	—	—						—
20”	—	—		—		—		
22”	—	—	—	—	—	—	—	

Cushion selection continued on the following page.

Cushion size Selection Continued

Stealth Premiere P Cushion with FRG Top Foam, Urethane Liner and CoolCore Cover

- ☐ Premiere P Cushion, 14"-20" Wide, FRG Top Foam, Urethane Liner, CoolCore Cover, E2605 ..... $358
- ☐ Premiere P Cushion, 22" Wide, FRG Top Foam, Urethane Liner, CoolCore Cover, E2606 ..... $524

Cushion Part: PREM-FUC*XX*YY

Cushion Width: _____

Cushion Depth: _____

Depth \ Width	14”	15”	16”	17”	18”	19”	20”	22”
13”		—	—	—	—	—	—	—
14”			—	—	—	—	—	—
15”			—	—	—	—	—	—
16”						—		—
17”	—							—
18”	—	—						
19”	—	—						—
20”	—	—		—		—		
22”	—	—	—	—	—	—	—	

Stealth Premiere P Cushion with FRG Top Foam, Polyurethane Liner and CoolCore Cover

- ☐ Premiere P Cushion, 14"-20" Wide, FRG Top Foam, Polyurethane Liner, CoolCore Cover, E2605 ..... $416
- ☐ Premiere P Cushion, 22" Wide, FRG Top Foam, Polyurethane Liner, CoolCore Cover, E2606 ..... $603

Cushion Part: PREM-FPC*XX*YY

Cushion Width: _____

Cushion Depth: _____

Depth \ Width	14”	15”	16”	17”	18”	19”	20”	22”
13”		—	—	—	—	—	—	—
14”			—	—	—	—	—	—
15”			—	—	—	—	—	—
16”						—		—
17”	—							—
18”	—	—						
19”	—	—						—
20”	—	—		—		—		
22”	—	—	—	—	—	—	—	

2. Add Solid Base

The Premiere P Cushion is available with optional ABS Flat Rigidizer or ACM Rigidizer.

2.a ABS Flat Rigidizer

Cushion Size	Part	MSRP
☐ 14"W x 13"D	DWR1010E190C	$48
☐ 14"W x 14"D	DWR1010E190E	$48
☐ 14"W x 15"D	DWR1010E190E	$48
☐ 14"W x 16"D	DWR1010E190G	$48
☐ 15"W x 14"D	DWR1010E190G	$48
☐ 15"W x 15"D	MEC1804152-1515	$48
☐ 15"W x 16"D	MEC1804152-1515	$48
☐ 15"W x 17"D	DWR1010E232H	$48
☐ 16"W x 16"D	DWR1010E191G	$48
☐ 16"W x 17"D	DWR1010E191G	$48
☐ 16"W x 18"D	DWR1010E191I	$48

Cushion Size	Part	MSRP
☐ 16"W x 19"D	DWR1010E191I	$48
☐ 16"W x 20"D	DWR1010E191K	$48
☐ 17"W x 16"D	MEC1804152-1715	$48
☐ 17"W x 17"D	DWR1010E234H	$48
☐ 17"W x 18"D	DWR1010E234H	$48
☐ 17"W x 19"D	DWR1010E234J	$48
☐ 18"W x 16"D	DWR1010E192G	$48
☐ 18"W x 17"D	DWR1010E192G	$48
☐ 18"W x 18"D	DWR1010E192I	$48
☐ 18"W x 19"D	DWR1010E192I	$48
☐ 18"W x 20"D	DWR1010E192K	$48

Cushion Size	Part	MSRP
☐ 19"W x 17"D	MEC1804152-1917	$48
☐ 19"W x 18"D	MEC1804152-1917	$48
☐ 19"W x 19"D	MEC1804152-1919	$48
☐ 20"W x 16"D	DWR1010E193G	$58
☐ 20"W x 17"D	DWR1010E193G	$58
☐ 20"W x 18"D	DWR1010E193I	$58
☐ 20"W x 19"D	DWR1010E193I	$58
☐ 20"W x 20"D	DWR1010E193K	$58
☐ 22"W x 18"D	DWR1010E193I	$58
☐ 22"W x 20"D	DWR1010E194K	$58
☐ 22"W x 22"D	DWR1010E194M	$58

Solid Base selection continued on the following page.

Add Solid Base Continued

2.b ACM Rigidizer

For use on Manual Wheelchairs Only

Cushion Size	Part	MSRP
☐ 15"W x 16"D	CUS142467-1616	$100
☐ 15"W x 17"D	CUS142467-1616	$100
☐ 16"W x 16"D	CUS142467-1616	$100
☐ 16"W x 17"D	CUS142467-1616	$100
☐ 16"W x 18"D	CUS142467	$100
☐ 16"W x 19"D	CUS142467	$100
☐ 16"W x 20"D	CUS142467	$100
☐ 17"W x 16"D	CUS142467-1816	$100
☐ 17"W x 17"D	CUS142467-1816	$100
☐ 17"W x 18"D	CUS142467-1818	$100
☐ 17"W x 19"D	CUS142467-1818	$100
☐ 18"W x 16"D	CUS142466-1816	$100
☐ 18"W x 17"D	CUS142466-1816	$100
☐ 18"W x 18"D	CUS142466-1818	$100
☐ 18"W x 19"D	CUS142466-1818	$100
☐ 18"W x 20"D	CUS142466	$100
☐ 19"W x 18"D	CUS142466-2018	$100
☐ 19"W x 19"D	CUS142466-2018	$100
☐ 20"W x 18"D	CUS142465-2018	$100
☐ 20"W x 19"D	CUS142465-2018	$100
☐ 20"W x 20"D	CUS142465	$100

3. Add Fluid Proof Liner

The Premiere P Cushion is available with an additional Fluid Proof Urethane or Fluid Proof Polyurethane Liners Select size and quantity below.

3.a Urethane Liner

Cushion Size	Part	MSRP
☐ ___ QTY	14"W x 13"D Urethane Liner *Part: URL1709070-1413*	$53 ea.
☐ ___ QTY	14"W x 14"D Urethane Liner *Part: URL1709070-1414*	$53 ea.
☐ ___ QTY	14"W x 15"D Urethane Liner *Part: URL1709070-1415*	$53 ea.
☐ ___ QTY	14"W x 16"D Urethane Liner *Part: URL1709070-1416*	$53 ea.
☐ ___ QTY	15"W x 14"D Urethane Liner *Part: URL1709070-1514*	$53 ea.
☐ ___ QTY	15"W x 15"D Urethane Liner *Part: URL1709070-1515*	$53 ea.
☐ ___ QTY	15"W x 16"D Urethane Liner *Part: URL1709070-1516*	$53 ea.
☐ ___ QTY	15"W x 17"D Urethane Liner *Part: URL1709070-1517*	$53 ea.
☐ ___ QTY	16"W x 16"D Urethane Liner *Part: URL1709070-1616*	$53 ea.
☐ ___ QTY	16"W x 17"D Urethane Liner *Part: URL1709070-1617*	$53 ea.
☐ ___ QTY	16"W x 18"D Urethane Liner *Part: URL1709070-1618*	$53 ea.
☐ ___ QTY	16"W x 19"D Urethane Liner *Part: URL1709070-1619*	$53 ea.
☐ ___ QTY	16"W x 20"D Urethane Liner *Part: URL1709070-1620*	$53 ea.
☐ ___ QTY	17"W x 16"D Urethane Liner *Part: URL1709070-1716*	$53 ea.
☐ ___ QTY	17"W x 17"D Urethane Liner *Part: URL1709070-1717*	$53 ea.
☐ ___ QTY	17"W x 18"D Urethane Liner *Part: URL1709070-1718*	$53 ea.
☐ ___ QTY	17"W x 19"D Urethane Liner *Part: URL1709070-1719*	$53 ea.
☐ ___ QTY	17"W x 20"D Urethane Liner *Part: URL1709070-1720*	$53 ea.
☐ ___ QTY	18"W x 16"D Urethane Liner *Part: URL1709070-1816*	$53 ea.
☐ ___ QTY	18"W x 17"D Urethane Liner ..$ *Part: URL1709070-1817*	$53 ea.
☐ ___ QTY	18"W x 18"D Urethane Liner *Part: URL1709070-1818*	$53 ea.
☐ ___ QTY	18"W x 19"D Urethane Liner *Part: URL1709070-1819*	$53 ea.
☐ ___ QTY	18"W x 20"D Urethane Liner *Part: URL1709070-1820*	$53 ea.
☐ ___ QTY	19"W x 17"D Urethane Liner *Part: URL1709070-1917*	$53 ea.
☐ ___ QTY	19"W x 18"D Urethane Liner *Part: URL1709070-1918*	$53 ea.
☐ ___ QTY	19"W x 19"D Urethane Liner *Part: URL1709070-1919*	$53 ea.
☐ ___ QTY	20"W x 16"D Urethane Liner *Part: URL1709070-2016*	$53 ea.
☐ ___ QTY	20"W x 18"D Urethane Liner *Part: URL1709070-2018*	$53 ea.
☐ ___ QTY	20"W x 19"D Urethane Liner *Part: URL1709070-2019*	$53 ea.
☐ ___ QTY	20"W x 20"D Urethane Liner *Part: URL1709070-2020*	$53 ea.
☐ ___ QTY	22"W x 18"D Urethane Liner *Part: URL1709070-2218*	$63 ea.
☐ ___ QTY	22"W x 20"D Urethane Liner *Part: URL1709070-2220*	$63 ea.
☐ ___ QTY	22"W x 22"D Urethane Liner *Part: URL1709070-2222*	$63 ea.

3.b Polyurethane Liner

Cushion Size	Part	MSRP
☐ ___ QTY	14"W x 13"D Polyurethane Liner *Part: PUL1709030-1413*	$58 ea.
☐ ___ QTY	14"W x 14"D Polyurethane Liner *Part: PUL1709030-1414*	$58 ea.
☐ ___ QTY	14"W x 15"D Polyurethane Liner *Part: PUL1709030-1415*	$58 ea.
☐ ___ QTY	14"W x 16"D Polyurethane Liner *Part: PUL1709030-1416*	$58 ea.
☐ ___ QTY	15"W x 14"D Polyurethane Liner *Part: PUL1709030-1514*	$58 ea.
☐ ___ QTY	15"W x 15"D Polyurethane Liner *Part: PUL1709030-1515*	$58 ea.
☐ ___ QTY	15"W x 16"D Polyurethane Liner *Part: PUL1709030-1516*	$58 ea.
☐ ___ QTY	15"W x 17"D Polyurethane Liner *Part: PUL1709030-1517*	$58 ea.
☐ ___ QTY	16"W x 16"D Polyurethane Liner *Part: PUL1709030-1616*	$58 ea.
☐ ___ QTY	16"W x 17"D Polyurethane Liner *Part: PUL1709030-1617*	$58 ea.
☐ ___ QTY	16"W x 18"D Polyurethane Liner *Part: PUL1709030-1618*	$58 ea.
☐ ___ QTY	16"W x 19"D Polyurethane Liner *Part: PUL1709030-1619*	$58 ea.
☐ ___ QTY	16"W x 20"D Polyurethane Liner *Part: PUL1709030-1620*	$58 ea.
☐ ___ QTY	17"W x 16"D Polyurethane Liner *Part: PUL1709030-1716*	$58 ea.
☐ ___ QTY	17"W x 17"D Polyurethane Liner *Part: PUL1709030-1717*	$58 ea.
☐ ___ QTY	17"W x 18"D Polyurethane Liner *Part: PUL1709030-1718*	$58 ea.
☐ ___ QTY	17"W x 19"D Polyurethane Liner *Part: PUL1709030-1719*	$58 ea.
☐ ___ QTY	18"W x 16"D Polyurethane Liner *Part: PUL1709030-1816*	$58 ea.
☐ ___ QTY	18"W x 17"D Polyurethane Liner *Part: PUL1709030-1817*	$58 ea.
☐ ___ QTY	18"W x 18"D Polyurethane Liner *Part: PUL1709030-1818*	$58 ea.
☐ ___ QTY	18"W x 19"D Polyurethane Liner *Part: PUL1709030-1819*	$58 ea.
☐ ___ QTY	18"W x 20"D Polyurethane Liner *Part: PUL1709030-1820*	$58 ea.
☐ ___ QTY	19"W x 17"D Polyurethane Liner *Part: PUL1709030-1917*	$58 ea.
☐ ___ QTY	19"W x 18"D Polyurethane Liner *Part: PUL1709030-1918*	$58 ea.
☐ ___ QTY	19"W x 19"D Polyurethane Liner *Part: PUL1709030-1919*	$58 ea.
☐ ___ QTY	20"W x 16"D Polyurethane Liner *Part: PUL1709030-2016*	$58 ea.
☐ ___ QTY	20"W x 17"D Polyurethane Liner *Part: PUL1709030-2017*	$58 ea.
☐ ___ QTY	20"W x 18"D Polyurethane Liner *Part: PUL1709030-2018*	$58 ea.
☐ ___ QTY	20"W x 19"D Polyurethane Liner *Part: PUL1709030-2019*	$58 ea.
☐ ___ QTY	20"W x 20"D Polyurethane Liner *Part: PUL1709030-2020*	$58 ea.
☐ ___ QTY	22"W x 18"D Polyurethane Liner *Part: PUL1709030-2218*	$79 ea.
☐ ___ QTY	22"W x 20"D Polyurethane Liner *Part: PUL1709030-2220*	$79 ea.
☐ ___ QTY	22"W x 22"D Polyurethane Liner *Part: PUL1709030-2222*	$79 ea.

Additional Cover Selection on the following page.

4. Cover Selection

The Premiere P cushion is available with an additional CoolCore Cover. Select size and enter quantity below.

Coolcore Cover Selection

- ☐ ___ QTY 14"W x 13"D Coolcore Cover ..... $105 ea. *Part: PREMP-NBLK1413*
- ☐ ___ QTY 14"W x 14"D Coolcore Cover ..... $105 ea. *Part: PREMP-NBLK1414*
- ☐ ___ QTY 14"W x 15"D Coolcore Cover ..... $105 ea. *Part: PREMP-NBLK1415*
- ☐ ___ QTY 14"W x 16"D Coolcore Cover ..... $105 ea. *Part: PREMP-NBLK1416*
- ☐ ___ QTY 15"W x 14"D Coolcore Cover ..... $105 ea. *Part: PREMP-NBLK1514*
- ☐ ___ QTY 15"W x 15"D Coolcore Cover ..... $105 ea. *Part: PREMP-NBLK1515*
- ☐ ___ QTY 15"W x 16"D Coolcore Cover ..... $105 ea. *Part: PREMP-NBLK1516*
- ☐ ___ QTY 15"W x 17"D Coolcore Cover ..... $105 ea. *Part: PREMP-NBLK1517*
- ☐ ___ QTY 16"W x 16"D Coolcore Cover ..... $105 ea. *Part: PREMP-NBLK1616*
- ☐ ___ QTY 16"W x 17"D Coolcore Cover ..... $105 ea. *Part: PREMP-NBLK1617*
- ☐ ___ QTY 16"W x 18"D Coolcore Cover ..... $105 ea. *Part: PREMP-NBLK1618*
- ☐ ___ QTY 16"W x 19"D Coolcore Cover ..... $105 ea. *Part: PREMP-NBLK1619*
- ☐ ___ QTY 16"W x 20"D Coolcore Cover ..... $105 ea. *Part: PREMP-NBLK1620*
- ☐ ___ QTY 17"W x 16"D Coolcore Cover ..... $105 ea. *Part: PREMP-NBLK1716*
- ☐ ___ QTY 17"W x 17"D Coolcore Cover ..... $105 ea. *Part: PREMP-NBLK1717*
- ☐ ___ QTY 17"W x 18"D Coolcore Cover ..... $105 ea. *Part: PREMP-NBLK1718*
- ☐ ___ QTY 17"W x 19"D Coolcore Cover ..... $105 ea. *Part: PREMP-NBLK1719*
- ☐ ___ QTY 18"W x 16"D Coolcore Cover ..... $105 ea. *Part: PREMP-NBLK1816*
- ☐ ___ QTY 18"W x 17"D Coolcore Cover ..... $105 ea. *Part: PREMP-NBLK1817*
- ☐ ___ QTY 18"W x 18"D Coolcore Cover ..... $105 ea. *Part: PREMP-NBLK1818*
- ☐ ___ QTY 18"W x 19"D Coolcore Cover ..... $105 ea. *Part: PREMP-NBLK1819*
- ☐ ___ QTY 18"W x 20"D Coolcore Cover ..... $105 ea. *Part: PREMP-NBLK1820*
- ☐ ___ QTY 19"W x 17"D Coolcore Cover ..... $105 ea. *Part: PREMP-NBLK1917*
- ☐ ___ QTY 19"W x 18"D Coolcore Cover ..... $105 ea. *Part: PREMP-NBLK1918*
- ☐ ___ QTY 19"W x 19"D Coolcore Cover ..... $105 ea. *Part: PREMP-NBLK1919*
- ☐ ___ QTY 20"W x 16"D Coolcore Cover ..... $105 ea. *Part: PREMP-NBLK2016*
- ☐ ___ QTY 20"W x 17"D Coolcore Cover ..... $105 ea. *Part: PREMP-NBLK2017*
- ☐ ___ QTY 20"W x 18"D Coolcore Cover ..... $105 ea. *Part: PREMP-NBLK2018*
- ☐ ___ QTY 20"W x 19"D Coolcore Cover ..... $105 ea. *Part: PREMP-NBLK2019*
- ☐ ___ QTY 20"W x 20"D Coolcore Cover ..... $105 ea. *Part: PREMP-NBLK2020*
- ☐ ___ QTY 22"W x 18"D Coolcore Cover ..... $105 ea. *Part: PREMP-NBLK2218*
- ☐ ___ QTY 22"W x 20"D Coolcore Cover ..... $105 ea. *Part: PREMP-NBLK2220*
- ☐ ___ QTY 22"W x 22"D Coolcore Cover ..... $105 ea. *Part: PREMP-NBLK2222*

Special Order Stealth Premiere P Cushion

Please detail your special order cushion request. All special order cushion requests must be approved with the Quantum Custom Department. Please contact Quantum Inside Sales or Custom Department with questions. Extended lead time will apply. Cushion part numbers involved will be the cushion part number listed in previous sections modified to meet special order request stated in details below. Drawings are available below for sketch details.

☐ Special Order Stealth Premiere P Cushion. E2605/E2606 ..... $620 to $816

Cushion Width: _____ Cushion Depth: _____

☐ FRG Foam ☐ Urethane Liner ☐ Coolcore Cover
☐ Visco Foam ☐ Polyurethane Liner

Details

_____

_____

_____

_____

_____

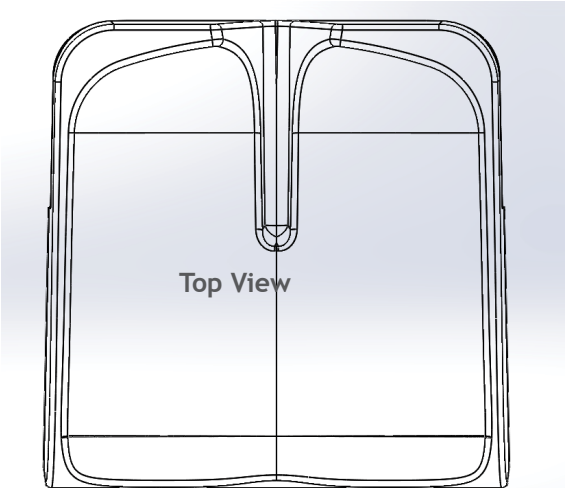

Front View

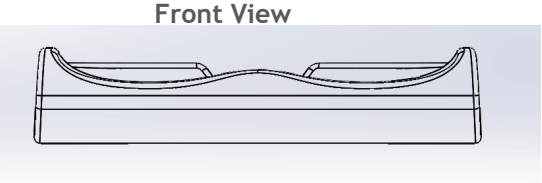

Right Side View

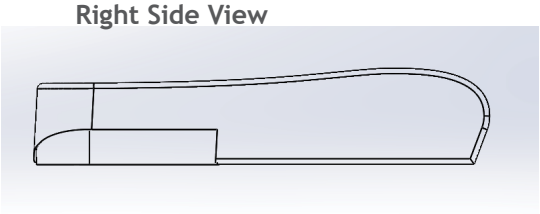

©2025 Quantum Rehab.
All rights reserved.

youtube.com/QuantumRehab facebook.com/QuantumRehab twitter.com/quantumrehab instagram.com/quantum_rehab